LTR	ZONE	REVISION RECORD / DESCRIPTION	DWN	DATE	LTR	ZONE	REVISION RECORD / DESCRIPTION	DWN	DATE	DRAWING NUMBER
1		New Realease	CSH	Feb.28-18						AN4-SMA20
2										
3										

General Spec.

Impedance : 50ohm (Normal)
Frequency Range : 0-6 GHz
Working Voltage :
0.81~1.37 : 125 VRMS max
RG-178 : 250 VRMS max
RG-316 ,.085": 335 VRMS max
Dielectric Withstanding Voltage:
OD0.8mm;1.13mm1.32mm;1.33mm : 125 VRMS max.
RG-178 : 170 VRMS max
RG-316 ,.085": 250 VRMS max
Insulator Resistance : 1000 Megohms min
Temperature Range : -40°C~85°C

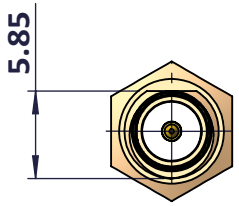

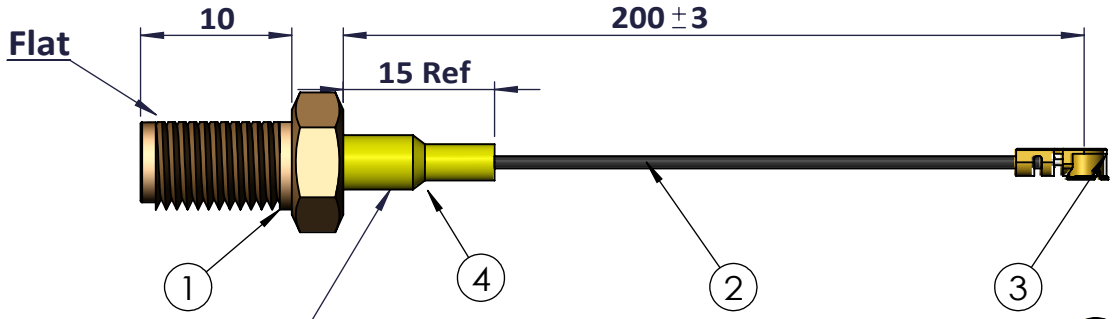

Printing : AN4-SMA20

Material : SMA

Body, Metal parts :Brass per QQ-B-626 Gold flase
Center Contacts :
Male: Brass per QQ-B-626 Gold flase
Female: Phosphor Bronze Gold flase
Insulators : Teflon

MHF
Type : 20448-001R-081
Contact : Phosphor Bronze : Au over Ni
Ground contact : Phosphor Bronze : Au over Ni
Housing :PBT UL94V-0
Insulator Resistance : Initial 500 Mohms min
Dielectric Withstanding Voltage: 200 VAC/Minute
Durability : 30 cycles

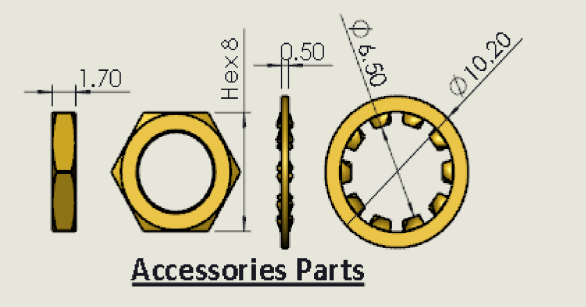

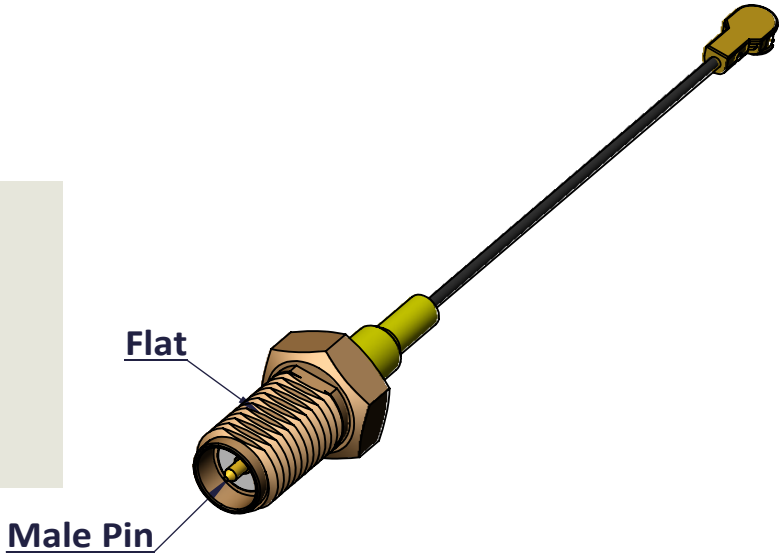

Electrical Spec

VSWR : 1.3 max @1- 6 GHz
Attenuation : (Return Loss)
Connector Loss : 0.06 x SQRT(f GHz)
Cable Loss : Cable Length x Cable Attenuation
Assemble Loss : 0.1dB x Conn. Q'ty

** Note 1*
General Dimension: (Length tolerance)
Cable Length : * Note 1
60-100 mm = ±2mm
100-200 mm =±3mm
200-500mm = ±4mm

RoHS COMPLIANT

OXFORD TEC®
ISO 9001 Certified Manufacturing OxfordTEC is a TradeMark of VoxMicro LTD

NO	DESCRIPTION	Q'TY	MATERIAL	PART NUMBER
5				
4	Shrink Tube Yellow (OD2~3)	1		M05-025002-YL
3	Conn. MHF4 (20448-001R-081)	1		M01-MHF481-HG
2	Coaxial Cable 0.81 Black	1		M02-081VSO-BL
1	Conn. RP SMA Jack L10 (RP SMA Female)	1		M01-054SPC-GJ

UNIT: mm
APVD: LCT 2018.05.17 kaven
MATERIAL
CHK
FINISH
DWN

DESCRIPTION
JC RP SMA(10) Jack (Male Pin) -0.81B
MHF4 L200mm

DIMENSION
1 PLC ± 0.5
2 PLC ± 0.3
3 PLC ± 0.2
ANGLES ± 1.5°

PART NUMBER: AN4-SMA20
REV: 1
A4
SCALE: 1 / 1
SHEET: 1 OF 1